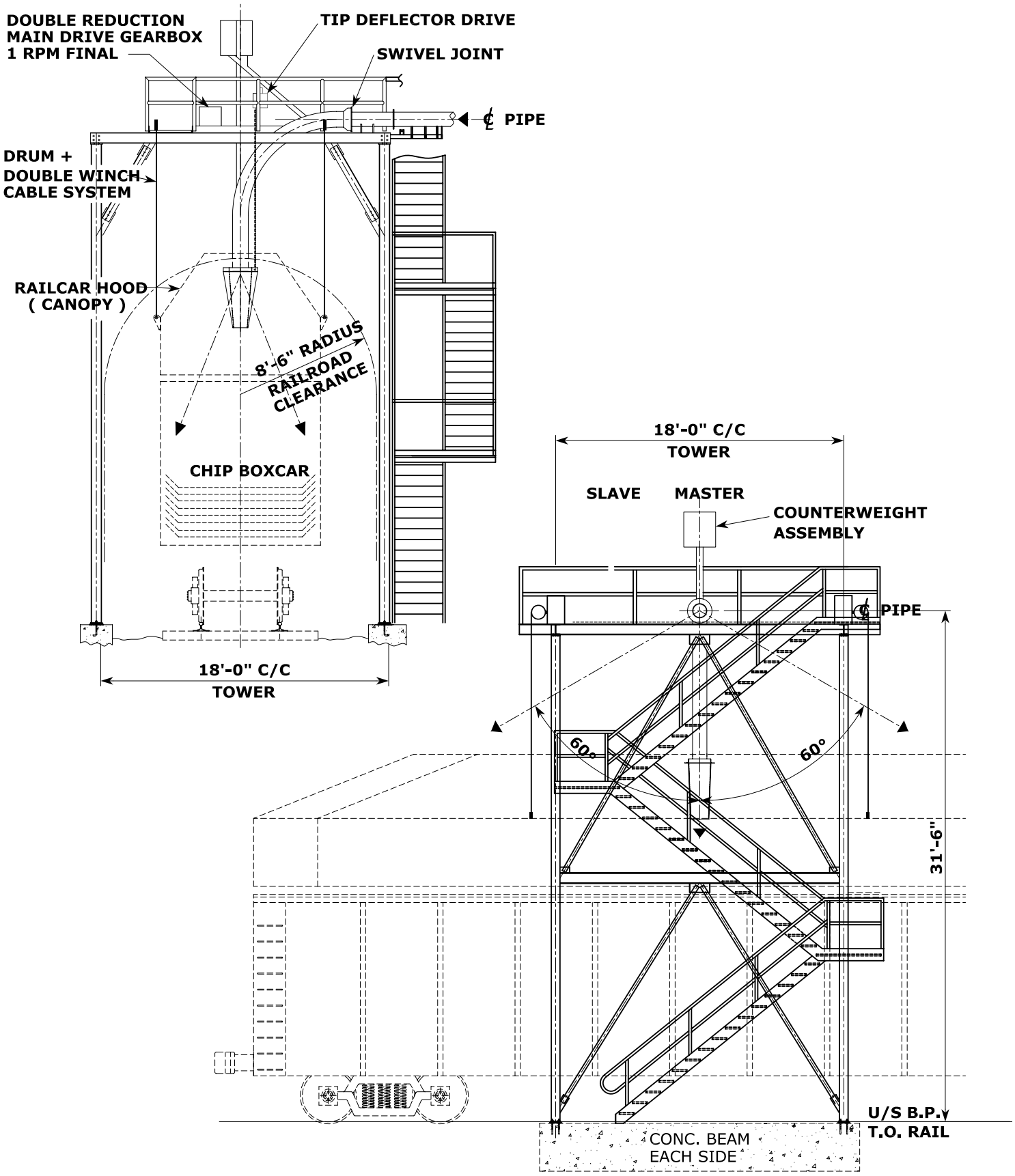BAUM Pneumatics Inc.	Specifications	A-6150
	Rail Loader Swivel & WigWag Deflector StairWay Access	Rev. 0 09 / 03