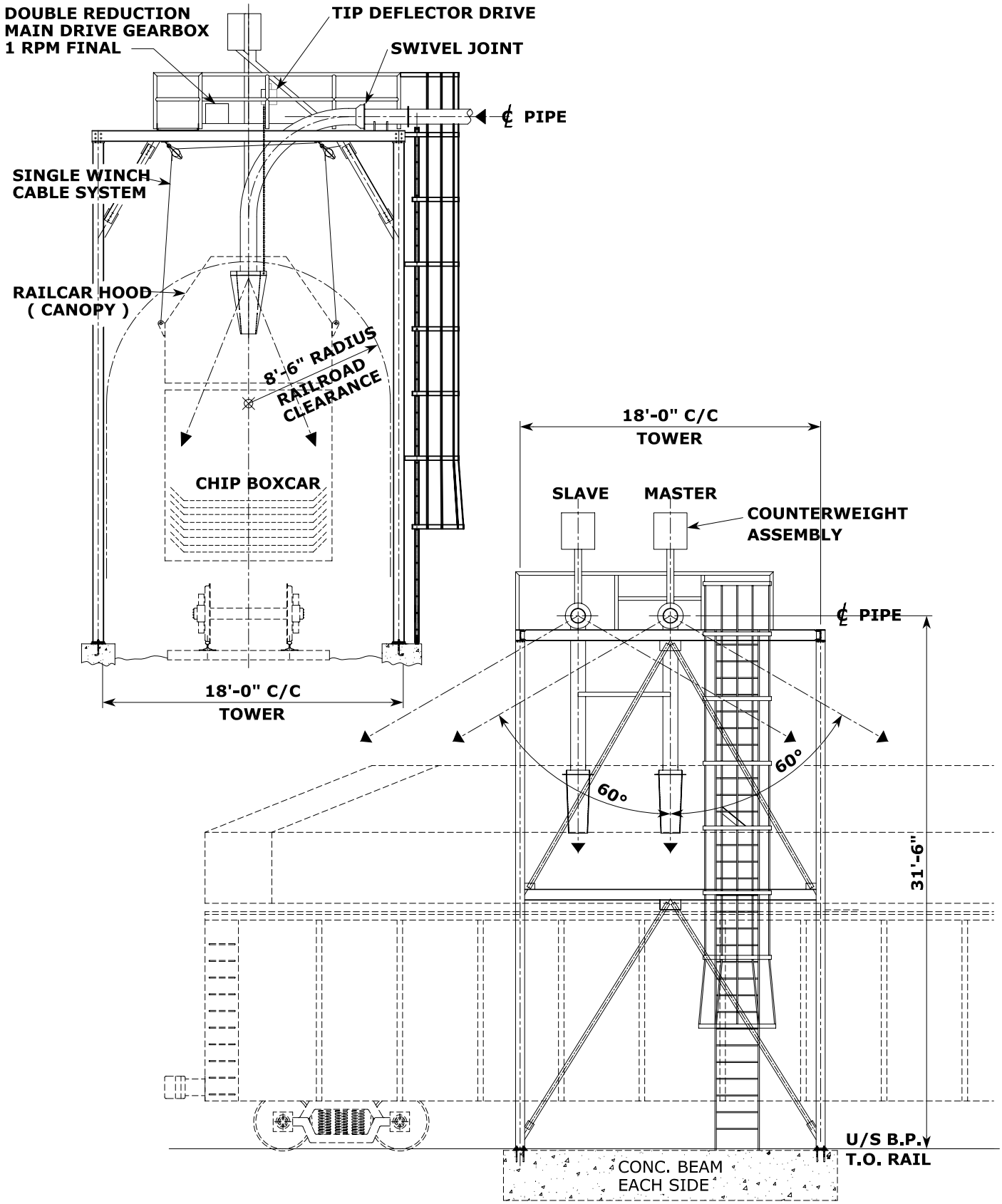BAUM Pneumatics Inc.	Specifications	A-6100
	Rail Loader Swivel & WigWag Deflector Master & Slave	Rev. 0 04 / 03