BAUM PNEUMATICS INC.	Specifications	A-1280
	Infeed Chute With False Bottom Shavings, Sanderdust, Dry Waste	Rev. 0 01 / 03

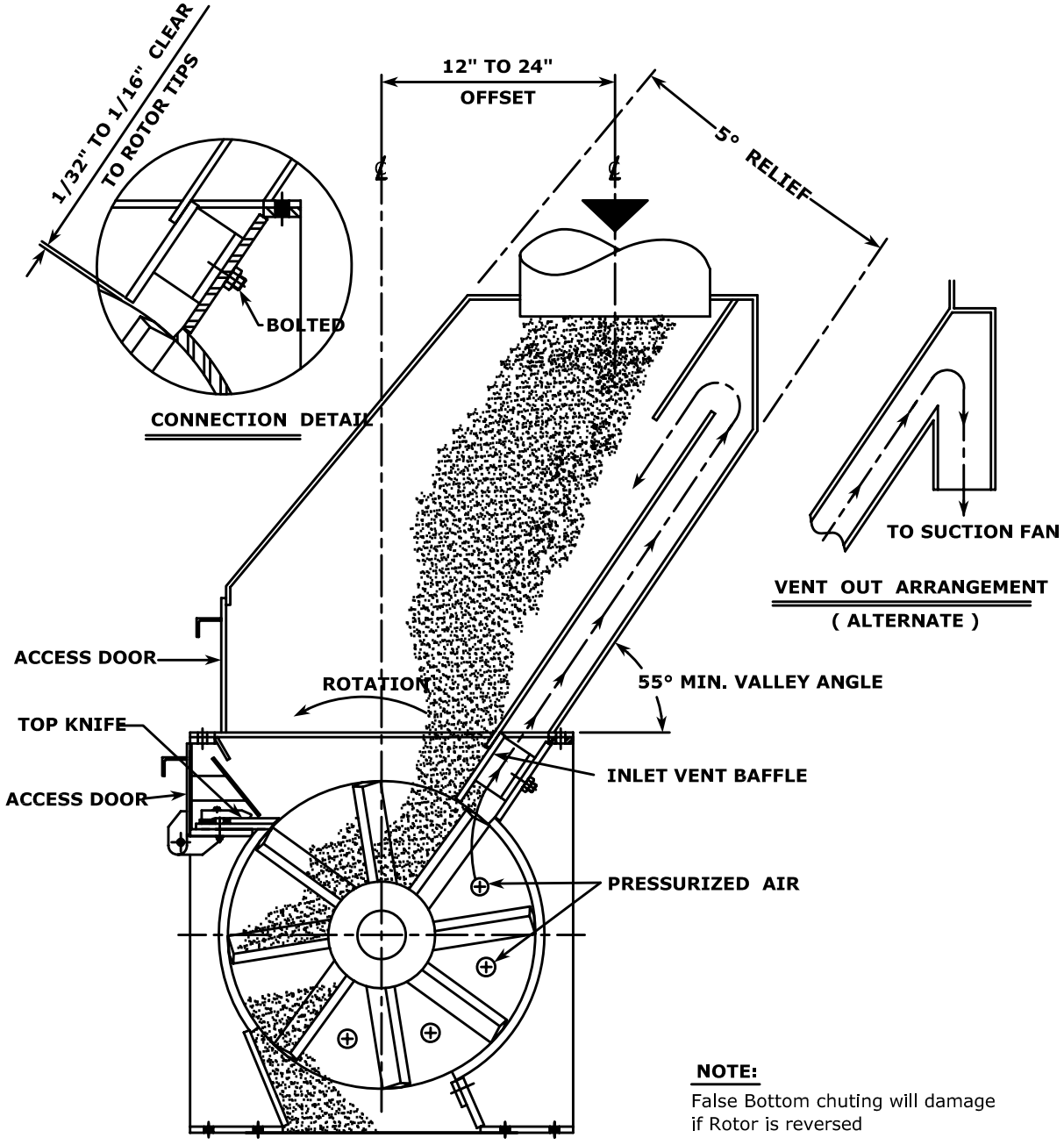

NOTE:
False Bottom chuting will damage if Rotor is reversed

VENT IN ARRANGEMENT